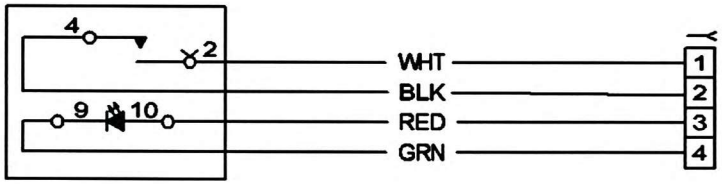
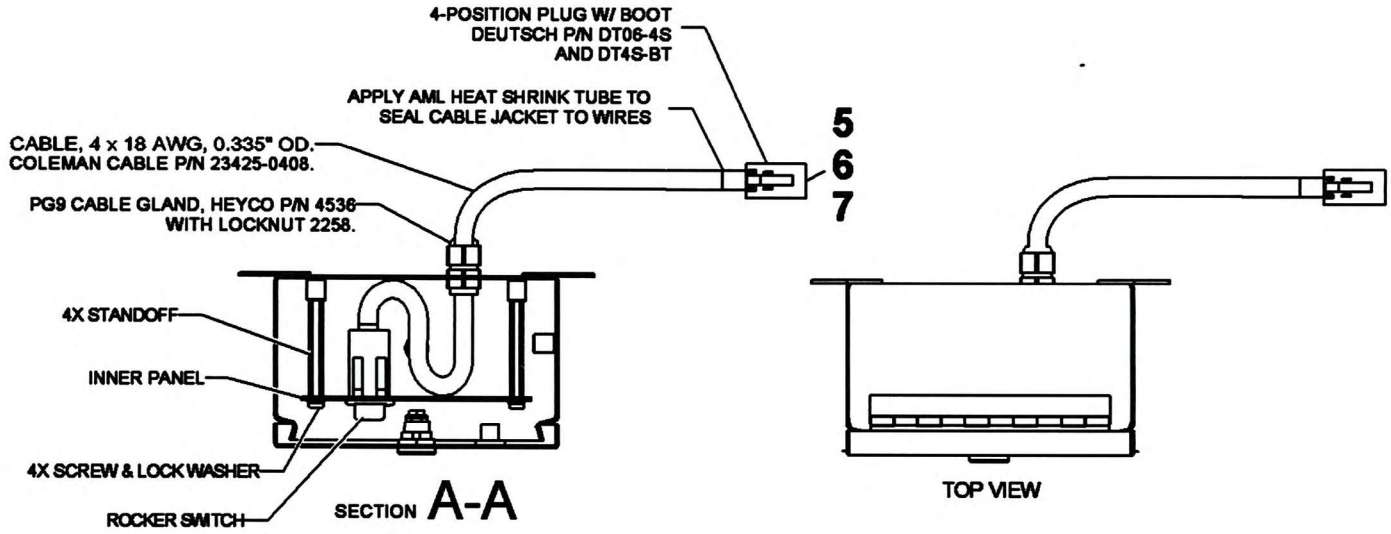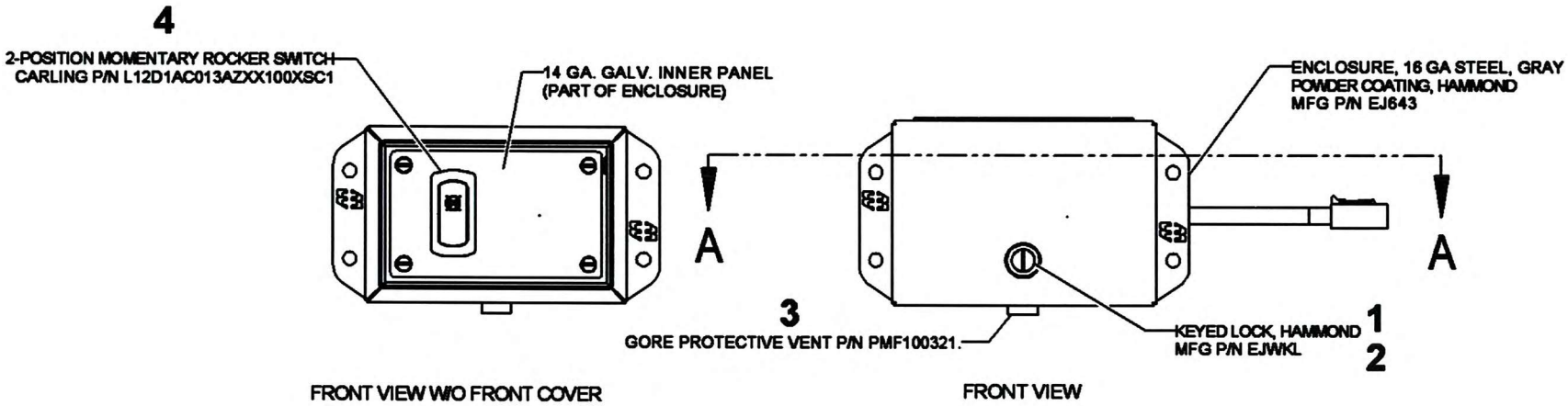
WIRING DIAGRAM